GAMMATRON TYPE 24

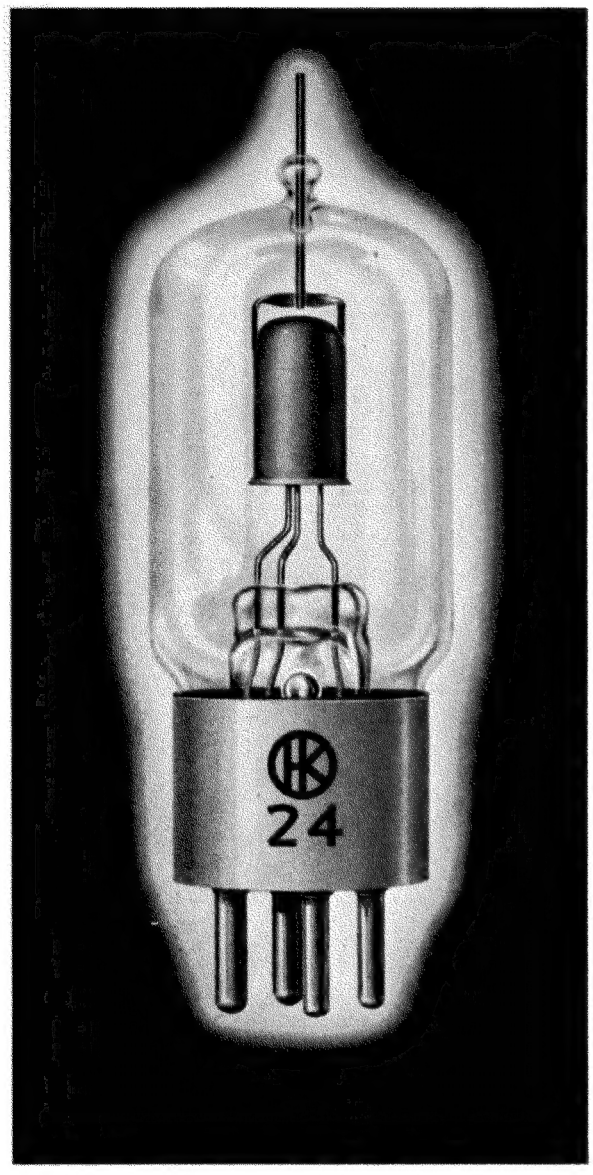

GENERAL PURPOSE TRIODE

Medium mu universal triode, 25 watt radiation cooled tantalum plate. Special design permits high voltage operation and unusual VHF efficiency.

PHYSICAL DATA

Plate	Cylindrical Tantalum
Grid	Braced Vertical Bar Tantalum
Filament	Thoriated Tungsten
Base	Small Four Pin Ceramic
Net Weight	1¼ Ounces
Shipping Weight	1¼ Pounds
Maximum Height	4⅜ Inches
Maximum Diameter	1-7/16 Inches

ELECTRICAL DATA

Filament Voltage	6.3 Volts
Filament Current	3.0 Amps
Normal Plate Dissipation	25 Watts
Maximum Average Plate Current	75 MA.
Maximum Average Grid Current	25 MA.
Maximum Plate Voltage	2000 Volts
Average Amplification Constant	25

INTERELECTRODE CAPACITANCES

Grid-Plate	1.3 Mmfd.
Grid-Filament	2.1 Mmfd.
Plate-Filament	0.2 Mmfd.

The type 24 Gammatron is a tube of unusual capabilities. The use of a long capped tantalum plate helps to confine all of the electron stream for useful power output. Its uniquely designed tantalum grid is closely spaced to the filament providing short electron time flight thus reducing losses at very high frequencies. Internal insulators are not required while at the same time perfect alignment is maintained. Thus the interelectrode capacities are low enabling the tube to operate free of parasitic oscillations.

With the use of tantalum and the elimination of unnecessary internal structures, it is possible to completely outgas Gammatron tubes without the use of the usual "getter." This excellent vacuum is retained throughout the full life of the tube, thus insuring you against failures caused by gas release due to overloads. The filament may then be operated in a manner consistent with high thermionic efficiency and long life.

The tantalum plate is designed to run hot. A cherry red color is an indication of normal operation and no damage will result at this temperature. The convenience of the use of the plate color as an indication of proper circuit efficiency and tuning will be appreciated immediately after trying the 24 GAMMATRON.

3500 8-45

HEINTZ AND KAUFMAN LTD.
SOUTH SAN FRANCISCO, CALIFORNIA, U. S. A.

TYPE HK-24

The information on this page does not represent exact conditions of operation to be imposed for any particular situation. Because tubes are used under many widely different conditions, Heintz and Kaufman will gladly furnish information for applications which differ appreciably from the illustrative examples given.

RADIO FREQUENCY POWER AMPLIFIER—CLASS "C" UNMODULATED

	Maximum Rating Per Tube	Typical Operation, 1 Tube		
D.C. Plate Voltage	2000	2000	1500	1000 Volts
D.C. Plate Current	75	56	75	75 M. A.
D.C. Grid Current	20	18	18	18 M. A.
D.C. Grid Voltage	−250	−140	−120	−100 Volts
Peak R.F. Grid Voltage		250	240	220 Volts
Grid Driving Power		4.0	3.8	3.6 Watts
Plate Dissipation	25	25	25	18 Watts
Plate Efficiency		81	80	76 Percent
Power Output		90	90	57 Watts
Plate Input		112 Watts		

RADIO FREQUENCY POWER AMPLIFIER—CLASS "C" PLATE MODULATED

(Carrier Conditions for use with 100% Modulation)

	Maximum Rating Per Tube	Typical Operation, 1 Tube		
D.C. Plate Voltage	1500	1500	1250	1000 Volts
D.C. Plate Current	60	50	60	60 M.A.
D.C. Grid Current	20	20	20	20 M. A.
D.C. Grid Voltage	−250	−145	−125	−105 Volts
Peak R.F. Grid Voltage		245	230	210 Volts
Grid Driving Power		4.5	4.1	3.8 Watts
Plate Dissipation	17	15	15	13 Watts
Plate Efficiency		80	80	78 Percent
Power Output		60	60	47 Watts
Plate Input		75 Watts		

RADIO FREQUENCY DOUBLER AMPLIFIER

(Feedback Voltage Neutralized by Conventional Methods)

	Maximum Rating Per Tube	Typical Operation, 1 Tube		
D.C. Plate Voltage	1500	1500	1250	1000 Volts
D.C. Plate Current	70	50	58	70 M. A.
D.C. Grid Voltage	−250	−240	−250	−250 Volts
D.C. Grid Current	18	12	14	18 M. A.
Peak R.F. Grid Voltage		345	365	380 Volts
Driving Power		3.9	4.7	6.4 Watts
Plate Dissipation	25	24	24	25 Watts
Tube Efficiency		68	67	64 Percent
Power Output		51	49	45 Watts

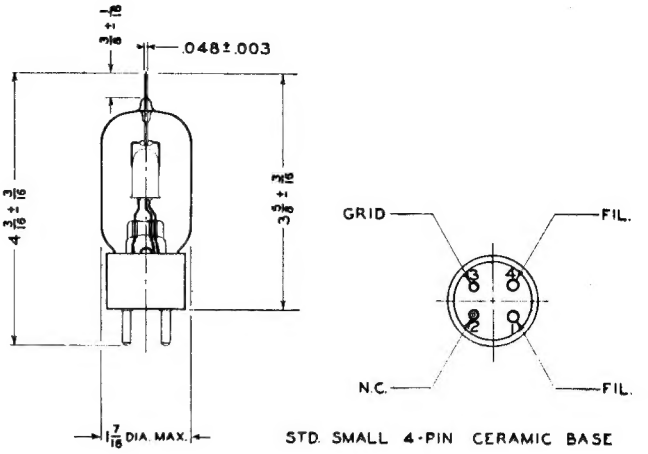

AUDIO FREQUENCY POWER AMPLIFIER—CLASS "B" MODULATOR

	Maximum Rating Per Tube	Typical Operation, 2 Tubes		
D.C. Plate Voltage	1500	1250	1000	500 Volts
D.C. Plate Current—Maximum Signal	75	136	150	150 M. A.
D.C. Plate Current—Zero Signal		24	30	70 M. A.
D.C. Grid Voltage	−250	−42	−29	0
Peak A.F. Grid-to-Grid Voltage		256	248	190 Volts
Load Resistance (Plate to Plate)		21200	15000	6400 Ohms
Plate Dissipation	25	50	45	30 Watts
Plate Efficiency		70	69	60 Percent
Driving Power—(Nominal)		4.2	4.5	3.5 Watts
Power Output		120	105	45 Watts

RADIO FREQUENCY TRIPLER AMPLIFIER

(Feedback Voltage Neutralized by Conventional Methods)

	Maximum Rating Per Tube	Typical Operation, 1 Tube		
D.C. Plate Voltage	1500	1500	1250	1000 Volts
D.C. Plate Current	60	31	36	45 M. A.
D.C. Grid Voltage	−250	−220	−230	−250 Volts
D.C. Grid Current	15	7	9	11 M. A.
Peak R.F. Grid Voltage		295	315	350 Volts
Driving Power		1.9	2.5	3.5 Watts
Plate Dissipation	25	25	25	25 Watts
Tube Efficiency		47	45	45 Percent
Power Output		22	20	20 Watts

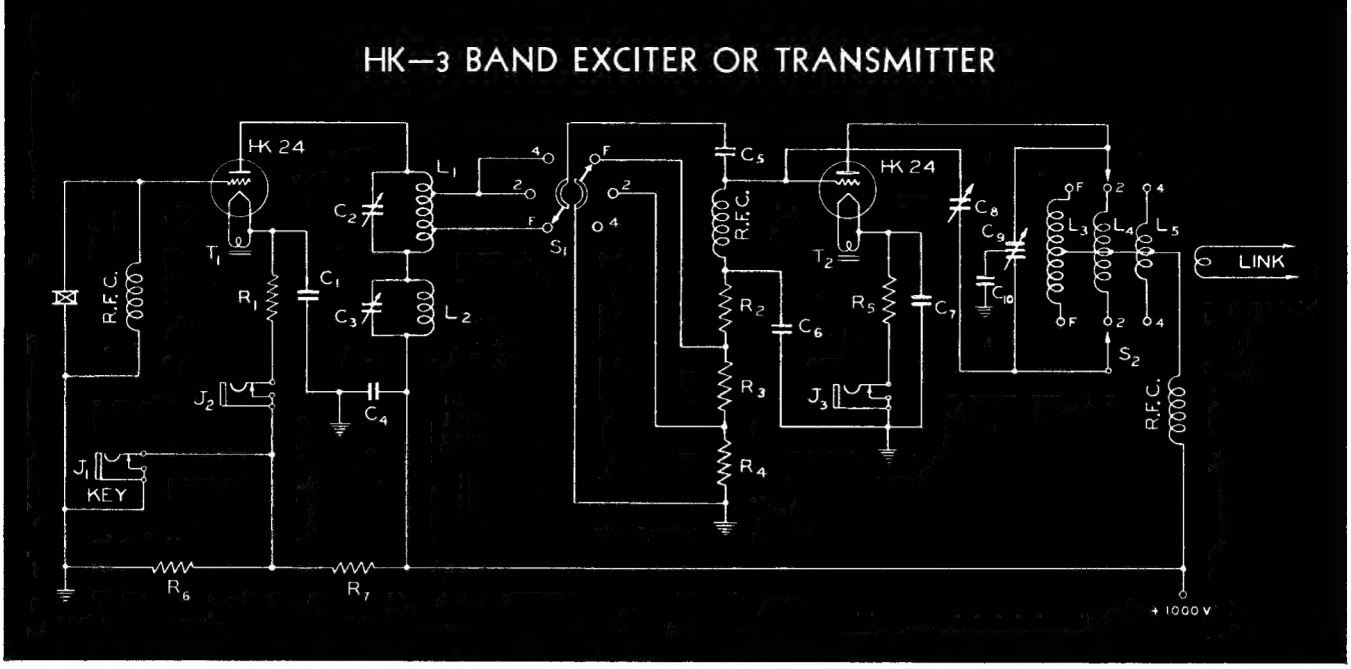

HK-3 BAND EXCITER OR TRANSMITTER

There is a universal need for an exciter or low power transmitter that is inexpensive, easy to build, easy to adjust, and requires a minimum of crystals. The exciter shown on this page has these features and will operate on three bands with a single crystal. It will give sufficient power output to excite a pair of 24 or 54 GAMMATRONS or a single 254 GAMMATRON on 10 meters and does not depend on regenerative action for its operation. Thus, it is not unstable and hard to tune as many of the previously published harmonic amplifiers have been. If desired, high speed keying of the crystal oscillator may be employed. A 160, 80 or 40 meter crystal may be used to give outputs on the fundamental, second and fourth harmonics with approximate respective powers of 50, 35 and 20 watts. The high fourth harmonic output is due to the circuit C_3 - L_2 which accentuates this voltage, giving a peaked wave form.

CRYSTAL OSCILLATOR

The crystal oscillator may be safely operated at 1000 volts with a 40 meter crystal, and 160 or 80 meter crystal may be safely operated with 1250 volts on the plate. The power output of the crystal stage is approximately 20 watts. This value depends greatly on the crystal activity. The tank condenser C_1 is tuned slightly to the low capacity side of resonance for best output and least crystal duty. The condenser C_3 is tuned to maximum capacity for operation on the fundamental and second harmonics and for resonance or maximum output of the harmonic amplifier when operated on the fourth harmonic. The oscillator will key excellently with crystals from 1.5 to 4 Mc., and 7 Mc. crystals key well, but are somewhat chirpy. If keying is not desired the resistors R_6 and R_7 may be eliminated and J_2 tied directly to ground.

HARMONIC AMPLIFIER

The excitation to the amplifier is adjusted with the taps on L_1. For fundamental operation the grid current should be 20 M. A. and the inductance L_1 tapped approximately 28% from the cold end. For second and fourth harmonic operation the coil tap should be approximately 55% from the cold end, and grid currents should be 11 and 4 M. A., respectively. Total cathode current should not exceed on the fundamental, 100 M. A., second, 80 M. A., and fourth harmonic, 60 M. A. The neutralization should be adjusted with C_8 while operating on the fundamental.

COMPONENTS

R_1— 1500 Ohm, 10 Watt resistor.
R_2— 2500 Ohm, 5 Watt resistor.
R_3—17500 Ohm, 5 Watt resistor.
R_4—20000 Ohm, 1 Watt resistor.
R_5— 1000 Ohm, 10 Watt resistor.
R_6—10000 Ohm, 10 Watt resistor.
R_7—100000 Ohm, 20 Watt resistor.

C_1—.01 mf. 500 Volt mica condenser.
C_2— 50 mmf. Receiving condenser.
C_3— 35 mmf. Midget condenser.
C_4—.005 mf. 1500 Volt mica condenser.
C_5—.000250 mf. 1500 Volt mica condenser.
C_6—.01 mf. 500 Volt mica condenser.
C_7—.01 mf. 500 Volt mica condenser.
C_8—1.4 mmf. neutralizing condenser.
C_9— 50-50 mm. split stator 2000 Volt condenser
C_{10}—.005 mf. 1500 Volt mica condenser.
J_1, J_2, J_3—Single circuit closing jacks.
S_1, S_2—2 pole, 3 point ceramic switches (ganged if desired).
T_1, T_2—6.3 Volt, 3 Ampere filament transformers.

COIL DATA

BAND		L_1	L_2	L_3, L_4, L_5
	Diameter	1½		2
	Length	2		2¼
160	Turns	80		58
	Wire	24 DSC		22 DSC
	Diameter	1½		2
	Length	1½		2
80	Turns	36		24
	Wire	20 DSC		16 DSC
	Diameter	1½	1½	2
	Length	1½	1½	2
40	Turns	18	26	14
	Wire	18	20	16
	Diameter		1	2
	Length		1½	2
20	Turns		22	9
	Wire		18	14
	Diameter		1	2
	Length		1	2
10	Turns		10	7
	Wire		18	14

Gammatron Tubes

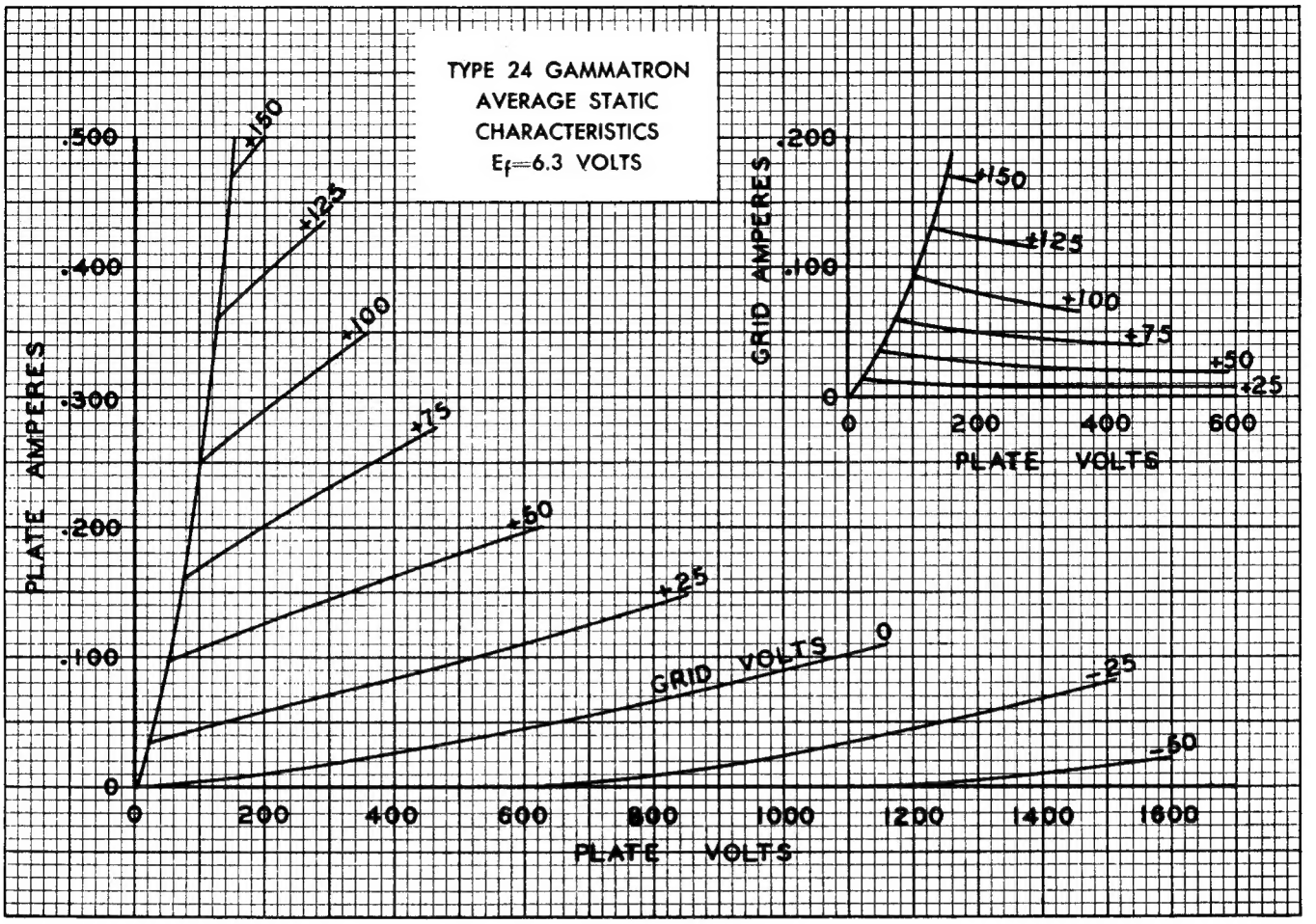
TYPE 24 GAMMATRON
AVERAGE STATIC
CHARACTERISTICS
Ef=6.3 VOLTS
PLATE AMPERES
.500
.400
.300
.200
.100
0
+150
+125
+100
+75
+50
+25
0
-25
-50
GRID VOLTS
0
200
400
600
800
1000
1200
1400
1600
PLATE VOLTS
GRID AMPERES
.200
.100
0
+150
+125
+100
+75
+50
+25
0
200
400
600
PLATE VOLTS

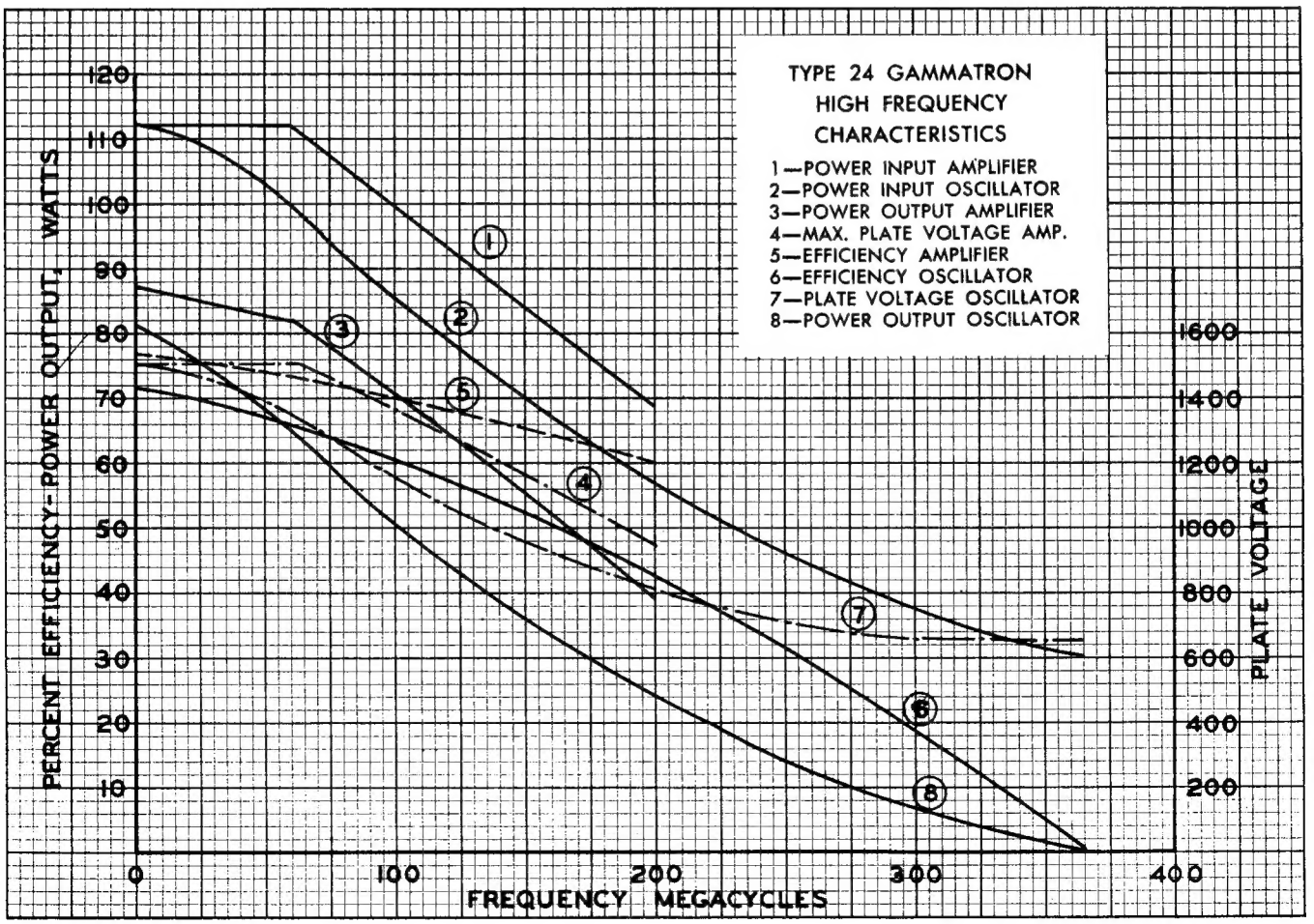
TYPE 24 GAMMATRON
HIGH FREQUENCY
CHARACTERISTICS
1—POWER INPUT AMPLIFIER
2—POWER INPUT OSCILLATOR
3—POWER OUTPUT AMPLIFIER
4—MAX. PLATE VOLTAGE AMP.
5—EFFICIENCY AMPLIFIER
6—EFFICIENCY OSCILLATOR
7—PLATE VOLTAGE OSCILLATOR
8—POWER OUTPUT OSCILLATOR
PERCENT EFFICIENCY-POWER OUTPUT, WATTS
120
110
100
90
80
70
60
50
40
30
20
10
0
100
200
300
400
FREQUENCY MEGACYCLES
1600
1400
1200
1000
800
600
400
200
PLATE VOLTAGE